FRONT VIEW

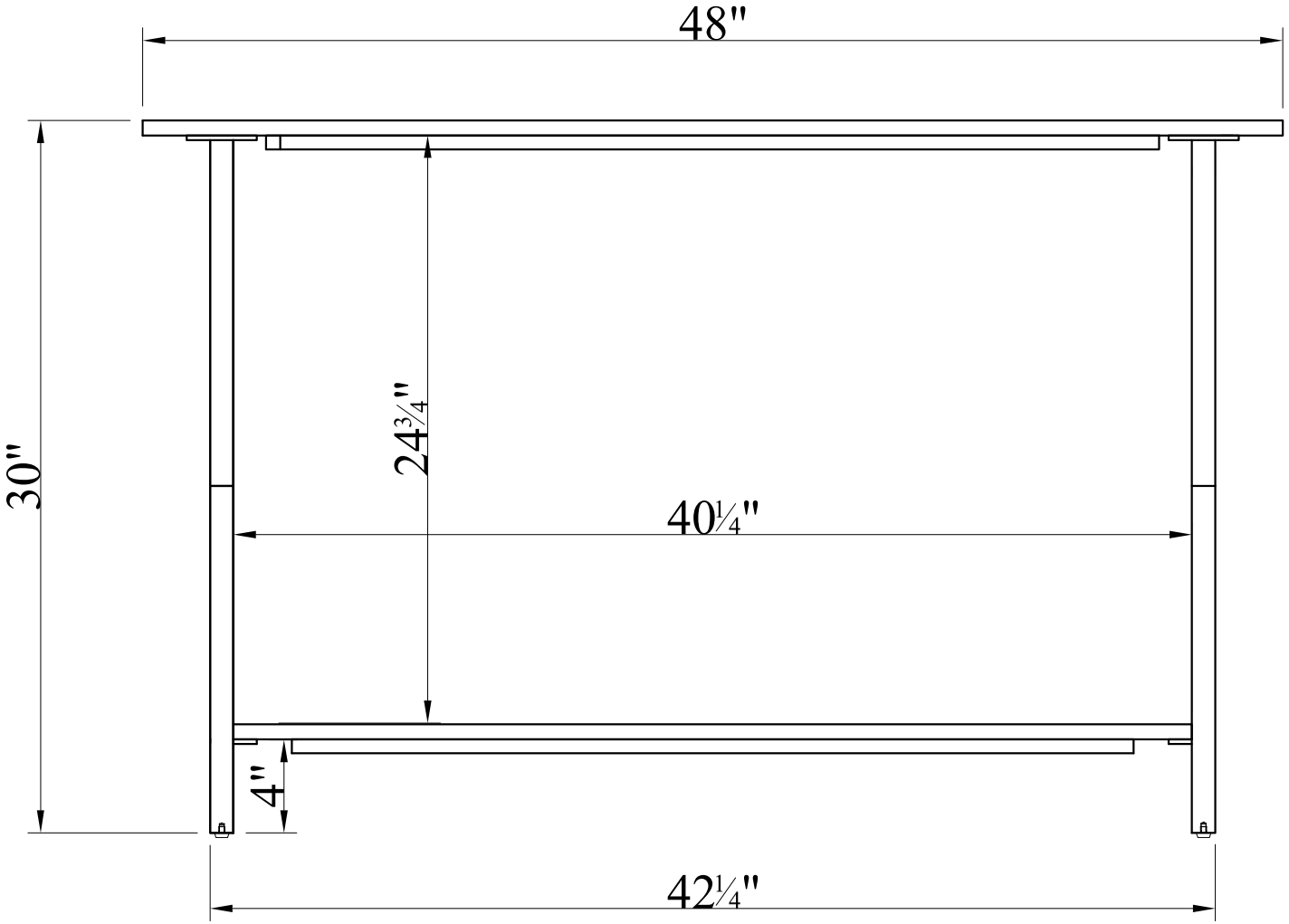

SIDE VIEW

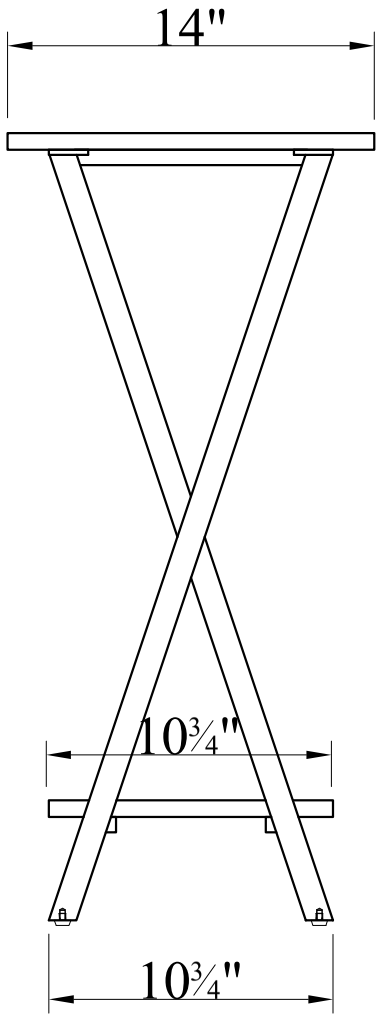

AWCT1020 TV CONSOLE